TERRAFORM

Deck

ASSEMBLY INSTRUCTIONS

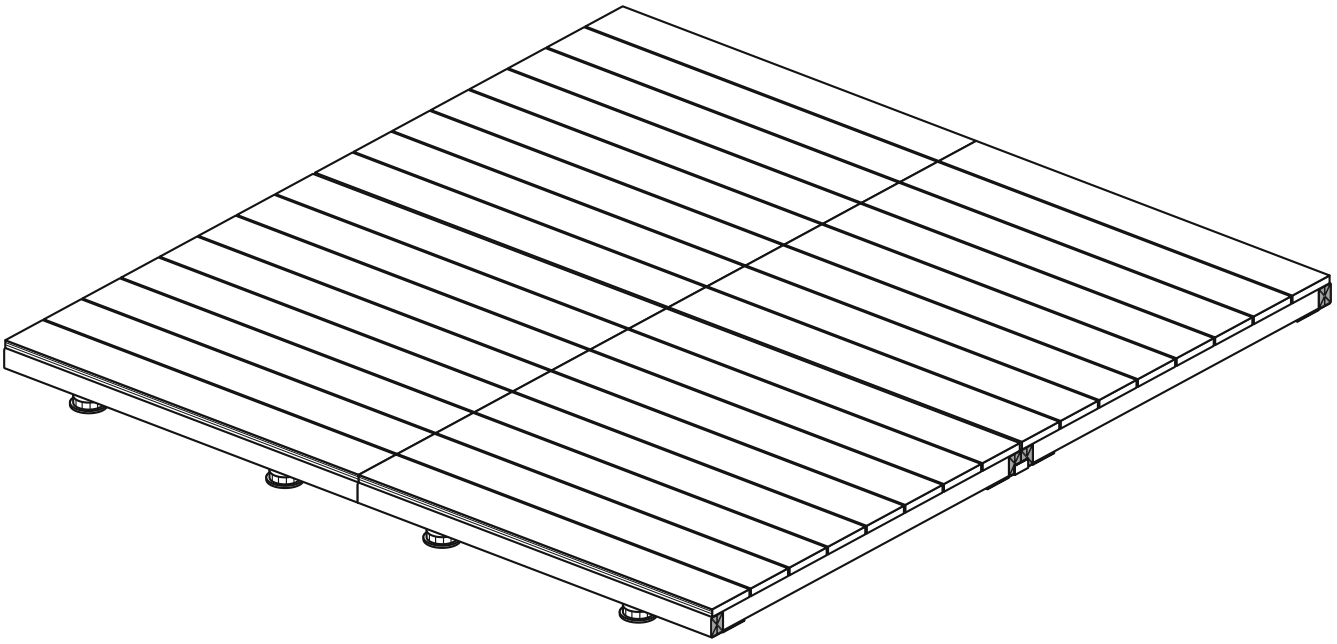

Photons to prosperity

VERSION 1 · 10 NOVEMBER 2026

Safety

Read every warning before you start. Keep this booklet with the deck.

WARNING | Risk of serious injury or death

PERMITS
Obtain every building permit. Meet every council and building code requirement.

FOOTINGS
A civil engineer must design and certify the footings and how the deck is held down to them. A light frame can lift in high wind.

UNDERGROUND SERVICES
Before you dig or drive ground screws, locate services through Before You Dig Australia: byda.com.au or 1100, free.

SPAN TABLE
Build within the span table on page 5. Never leave out a Leg, Joist or Clip.

LOAD
The deck is rated to 4.0 kPa. A filled spa, water tank or heavy planter can exceed it. Ask an engineer first.

MODIFICATIONS
Do not cut, drill or modify any part.

FALLS
Where a person could fall 1 m or more, fit a balustrade at least 1 m high. Balustrades are not included.

POOLS
Keep deck edges and steps more than 500 mm from a pool barrier. Metal within arm's reach of a pool may need bonding by a licensed electrician.

CHILDREN
Small parts. Keep screws and Clips away from children.

SURFACES
Boards are slippery when wet. Aluminium in full sun can burn bare feet.

CAUTION | Risk of damage to the deck

STEEL
Keep the aluminium frame off steel unless the steel is galvanised or powder coated.

SCREWS
Use the galvanised screws supplied.

SALT WATER
Near salt water or a pool, use 316 stainless screws with isolating washers.

MAINTENANCE
Check every screw and Clip once a year. Replace any damaged part.

QUESTIONS terraform.au

PREPARATION

Tools

Not included.

TOOLS



Drill and driver bits



Hammer



Tape measure



Spirit level

PROTECTIVE EQUIPMENT



Gloves



Safety glasses



Earmuffs

Two people are required to move and join frames. Boxes weigh up to 25 kg.

Bearers and Joists come pre-drilled. No cutting is required.

Every Leg needs a firm, level footing designed by a civil engineer.

Plan Your Deck

Any size. A frame is 2 Bearer lines joined by Joists.
Length is Bearers end to end. Width is frames side by side.

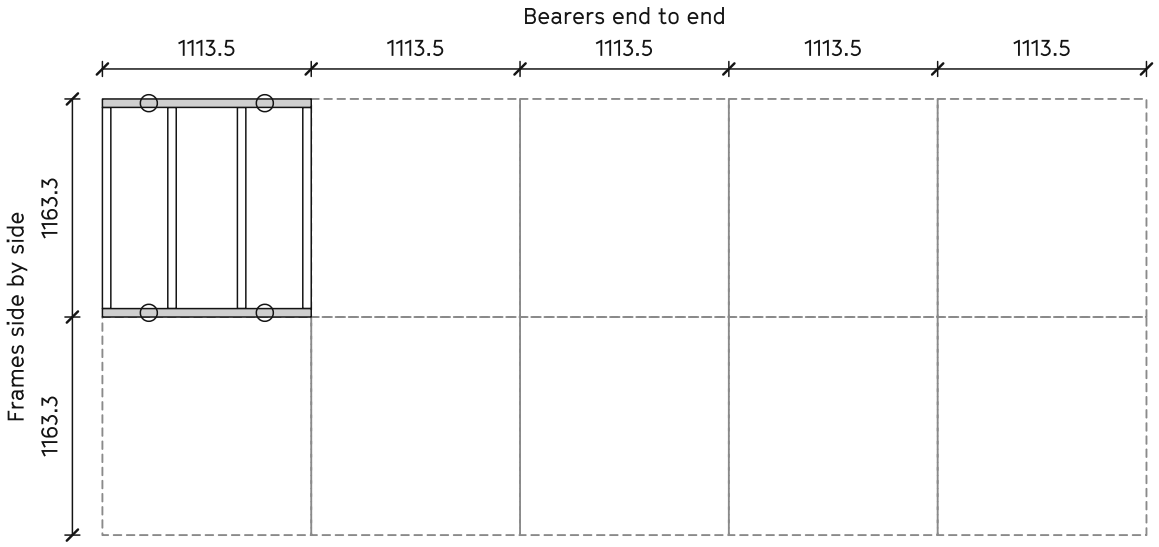

DECK LENGTH

Bearers end to end × 1113.5 mm

DECK WIDTH

Frames side by side × 1163.3 mm

DECK AREA IN SQUARE METRES

FRAMES SIDE BY SIDE	BEARERS END TO END					
	1 1.11 m	2 2.23 m	3 3.34 m	4 4.45 m	5 5.57 m	6 6.68 m
1 1.16 m	1.3	**2.6 SMALL**	3.9	5.2	6.5	7.8
2 2.33 m	2.6	**5.2 MEDIUM**	7.8	10.4	13.0	15.5
3 3.49 m	3.9	7.8	**11.7 LARGE**	15.5	19.4	23.3
4 4.65 m	5.2	10.4	15.5	20.7	25.9	31.1
5 5.82 m	6.5	13.0	19.4	25.9	32.4	38.9

Any combination works and stays within the span table on page 5.
Larger decks follow the same rule. Black cells are the standard kits.

Span Table

Build every deck within these limits. They hold for any length and width.

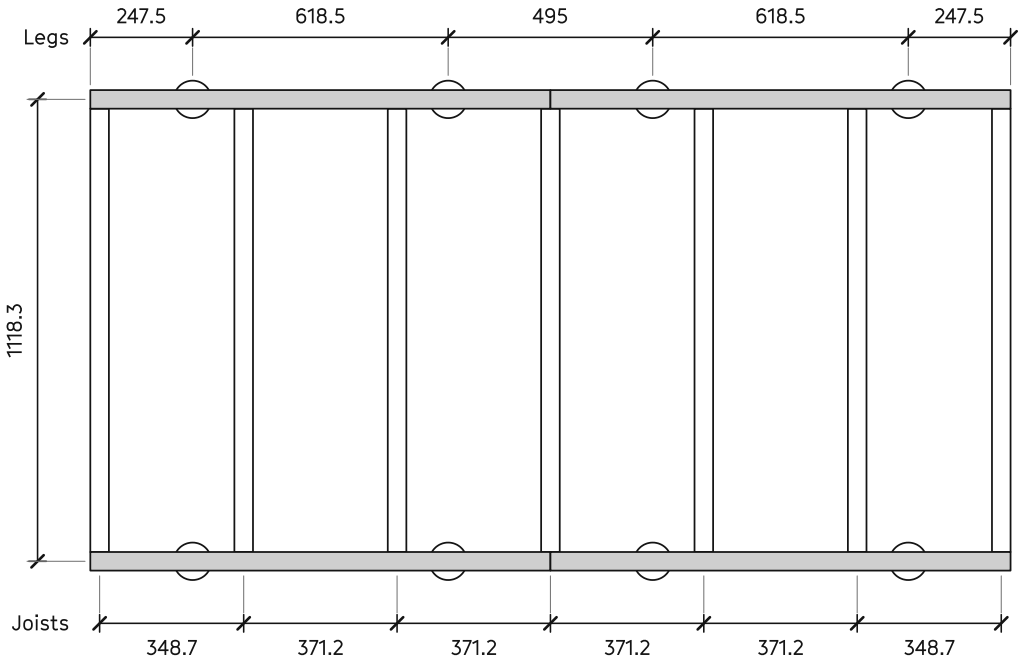

MEASUREMENT	MAXIMUM	THIS DECK
Joist spacing, centre to centre	450 mm	371.2 mm 348.7 mm at each deck end
Joist span, Bearer centre to Bearer centre	2000 mm	1118.3 mm
Leg spacing along a Bearer line	900 mm	618.5 mm 495 mm across a joint
Bearer end to nearest Leg	247.5 mm	247.5 mm

DESIGN LOAD

4.0 kPa live load,
about 400 kg per m²

SECTION

Bearers and Joists,
45 × 55 mm aluminium

RULE

Whole parts only.
Fit every Leg and Joist.

Parts

length = Bearers end to end · width = frames side by side

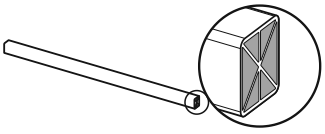

Bearer

1113.5 mm

2 × length × width

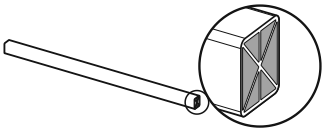

Joist

1073.3 mm

width × (3 × length + 1)

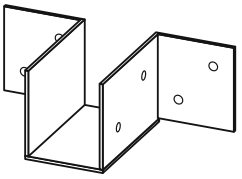

MiddleBracket

145 × 80 × 53 mm

2 × width × (3 × length − 1)

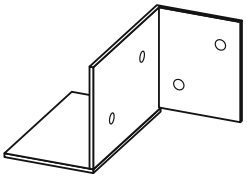

CornerOne

90 × 80 × 63 mm

2 × width

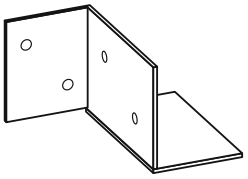

CornerTwo

Mirror of CornerOne

2 × width

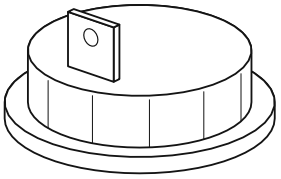

Leg

Ø90.7 × 45 mm

4 × length × width

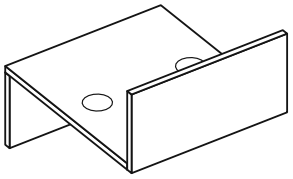

BearerDoubler

50 mm wide

2 × (width − 1)

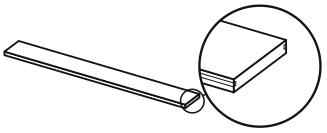

Board

1113.5 × 140 × 21 mm

8 × length × width

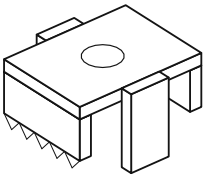

Clip

16.2 × 9.5 mm

14 × Joists

Frame-only kits leave out the Boards and Clips.

NOT INCLUDED

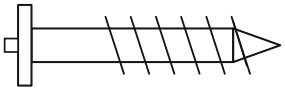

Ground Screw

Not included. Replaces the Legs in the ground screw option on page 8.

2 × length × (width + 1)

Fasteners

Galvanised screws are supplied. Near salt water or a pool, use 316 stainless screws with isolating washers.

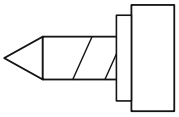

Bracket Screw

14G × 25 mm hex head

Fixes every MiddleBracket, CornerOne and CornerTwo to the Bearers and Joists.

1 in every bracket hole

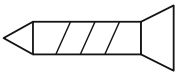

Clip Screw

10G × 25 mm

Fixes each Clip to a Joist through the 4 mm hole.

1 per Clip

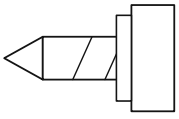

Leg Screw

Size to confirm

Fixes each Leg tab to a Bearer through the 6.2 mm hole.

1 per Leg

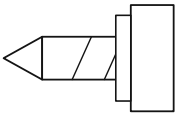

BearerDoubler Screw

Size to confirm

Fixes each BearerDoubler to both Bearers through the 8 mm holes.

2 per BearerDoubler

Ground Screw Option

For soft, sloping or uneven ground. Replaces steps 1 and 2. Ground screws not included.

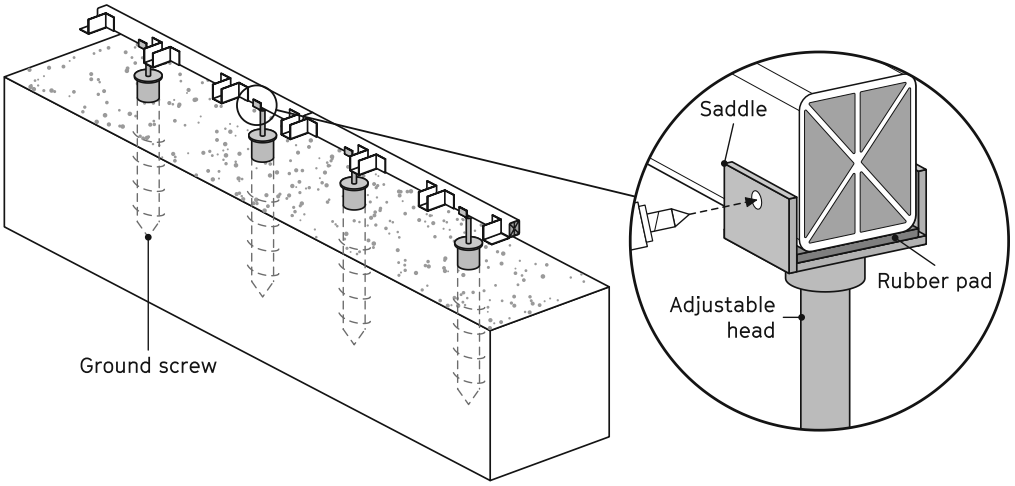

GROUND SCREW POSITIONS

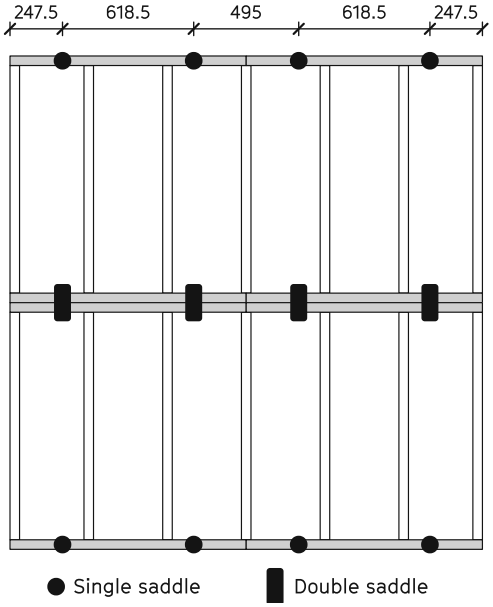

STEPS

1. Mark one line 22.5 mm in from each side of the deck, along the Bearers, and one line on each seam between frames.
2. On each line, mark a point 247.5 mm in from each Bearer end.
3. Drive a ground screw plumb at every point, to the depth the engineer specifies.
4. Set every head to the same height with a laser level or string line.
5. Fit a saddle to each head, single on outer lines and double on seams. Lay a rubber pad in each saddle.
6. Set the Bearers in the saddles and drive 1 screw through each saddle wall into the Leg hole. Continue from step 3.

SADDLE	GROUND SCREWS	LOAD PER SCREW
47 mm inside for 1 Bearer, 92 mm for 2 at a seam	2 × length × (width + 1)	About 1.4 kN, 2.7 kN at a seam

Loads assume the tested 4.0 kPa live load. An engineer sizes the ground screws for the soil and confirms the seam load. Figures in steps 3 to 12 show Legs; on ground screws, the Bearers sit in saddles.

1 Prepare the Site

BEFORE ASSEMBLY

Tape measure	Spirit level

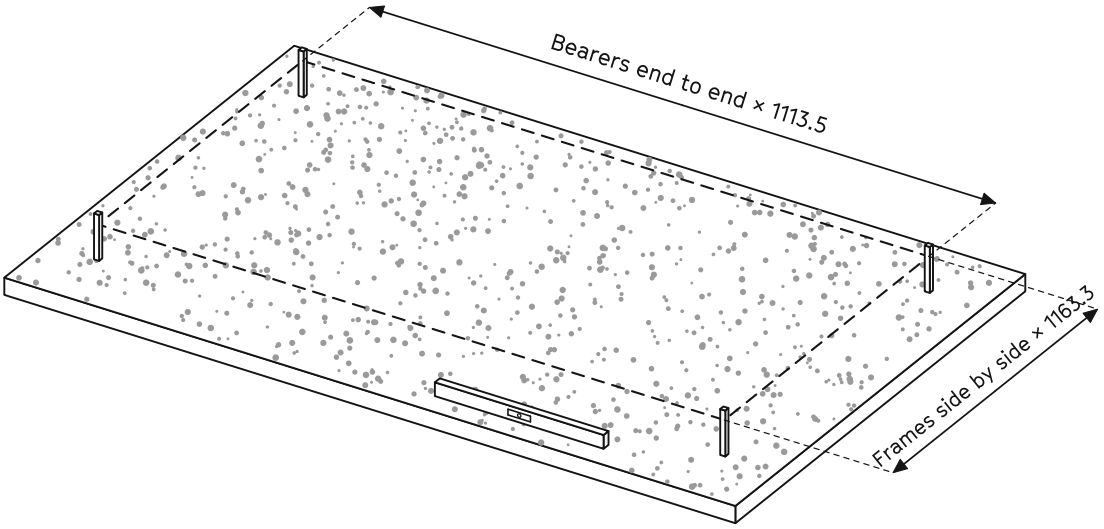

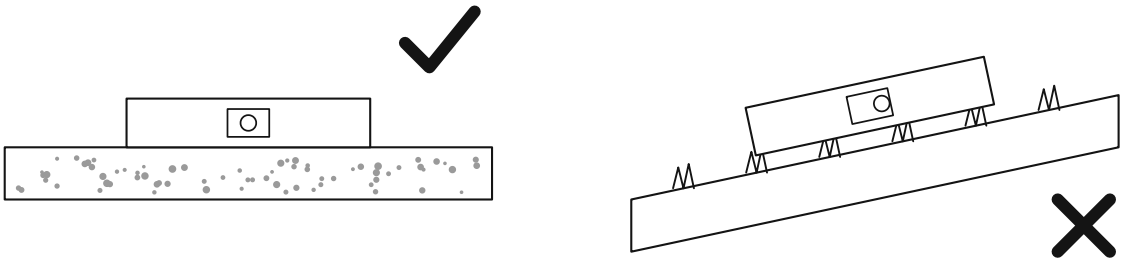

Mark out the deck on firm, level ground. Length is Bearers end to end × 1113.5 mm. Width is frames side by side × 1163.3 mm.

2 Fit the Legs

FOR EVERY BEARER

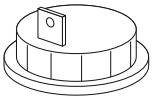

2×
Leg



2×
Leg screw

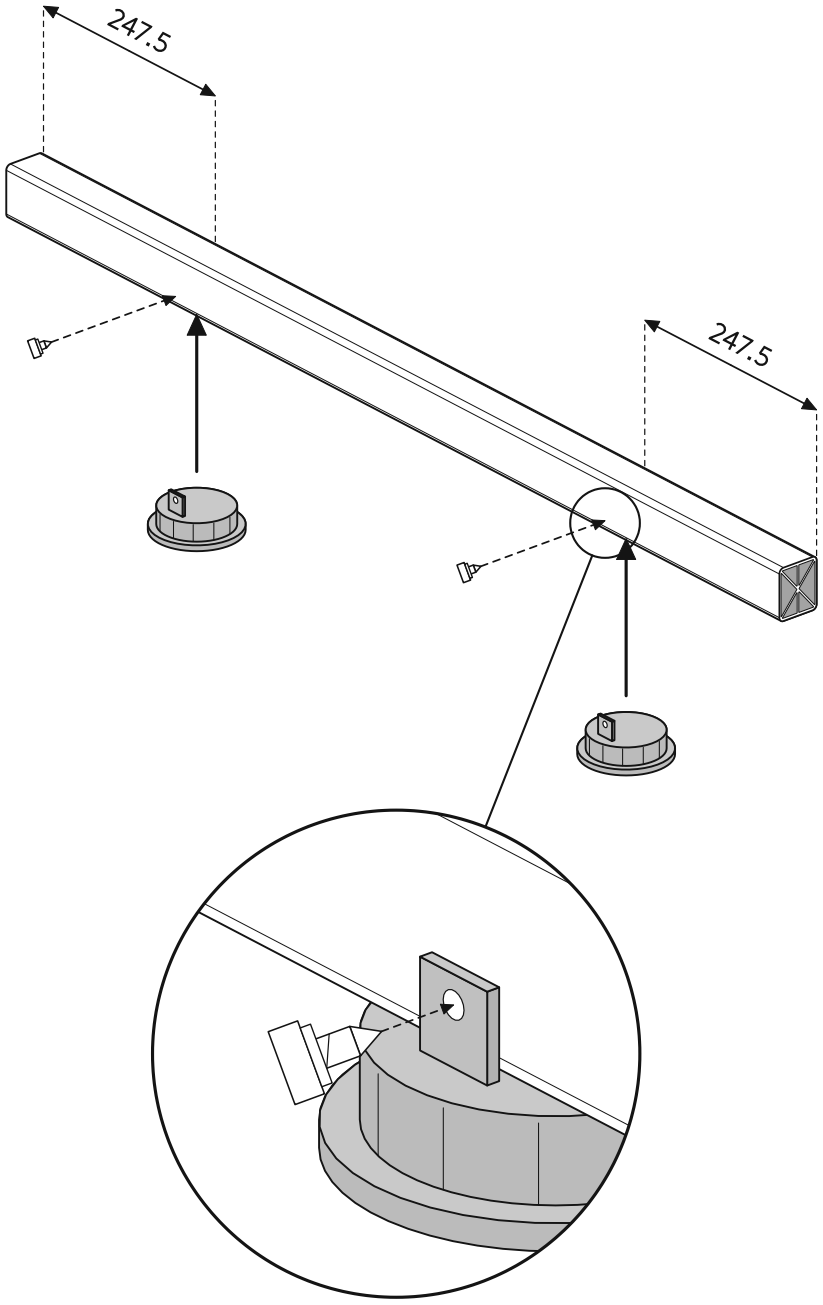

Fit 2 Legs to each Bearer, 247.5 mm in from each end. Drive 1 screw through each Leg tab into the pre-drilled hole.

3 Join the Bearers

FOR EVERY BEARER JOINT

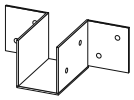

1×
MiddleBracket



1 per hole
Bracket screw

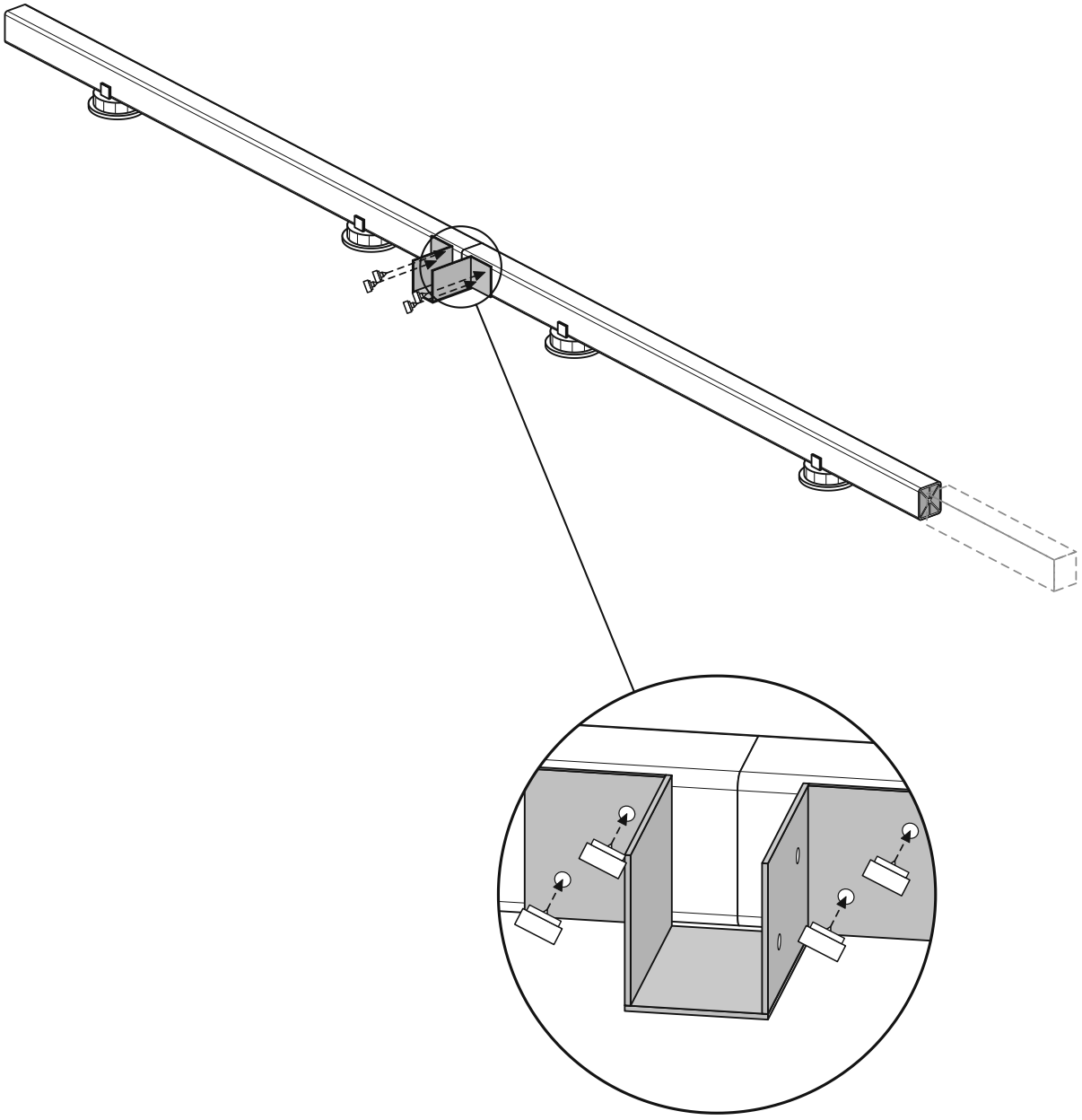

Butt 2 Bearers end to end. Fit a MiddleBracket across the joint and screw it to both Bearers.

4 Fit the MiddleBrackets

FOR EVERY BEARER

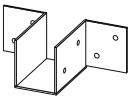

2×
MiddleBracket



1 per hole
Bracket screw

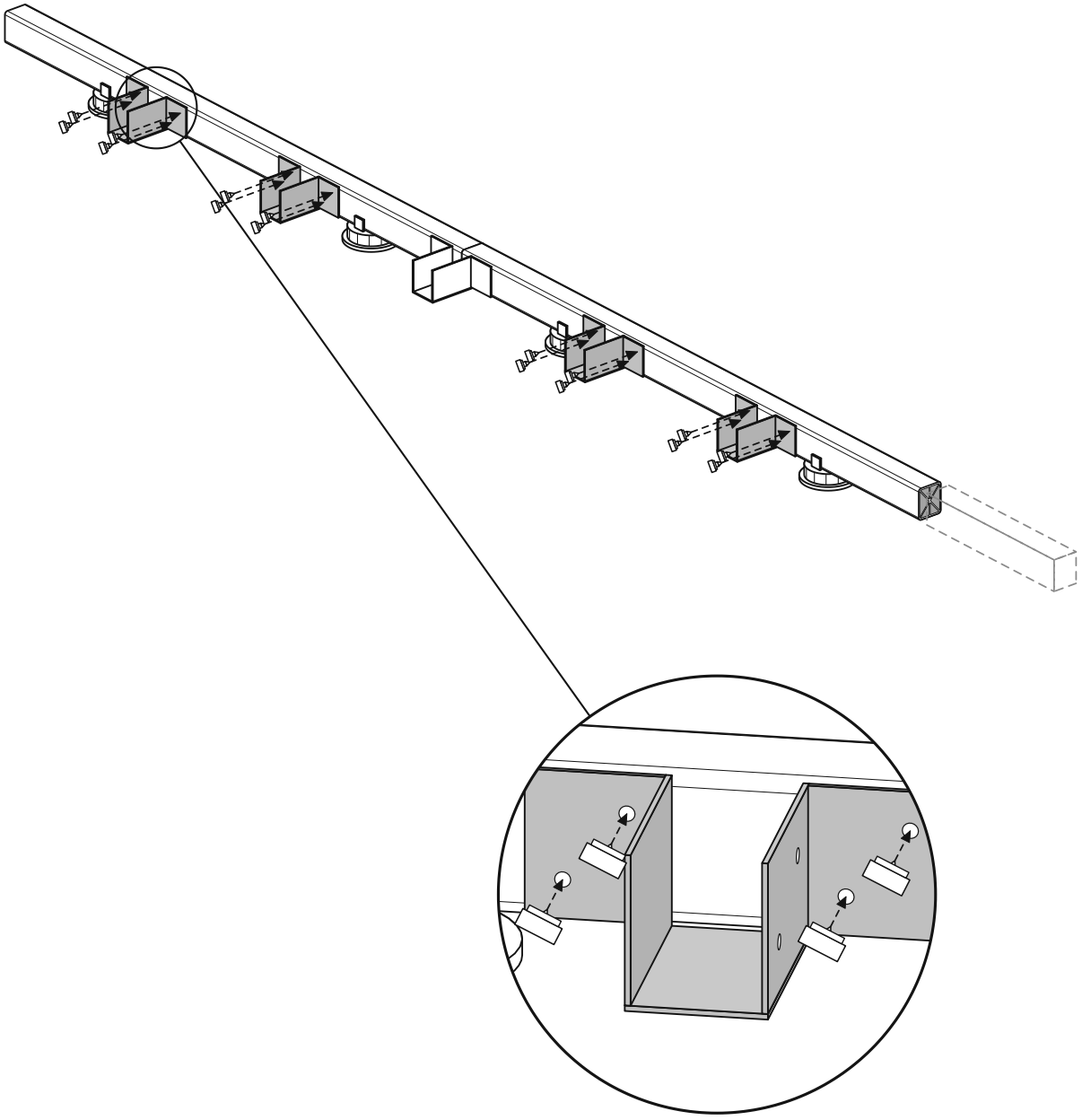

Fit 2 MiddleBrackets to each Bearer at the pre-drilled holes, one third and two thirds along.

5 Fit the Corner Brackets

FOR EVERY BEARER LINE

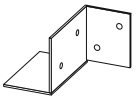

1×
CornerOne

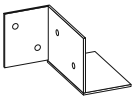

1×
CornerTwo



1 per hole
Bracket screw

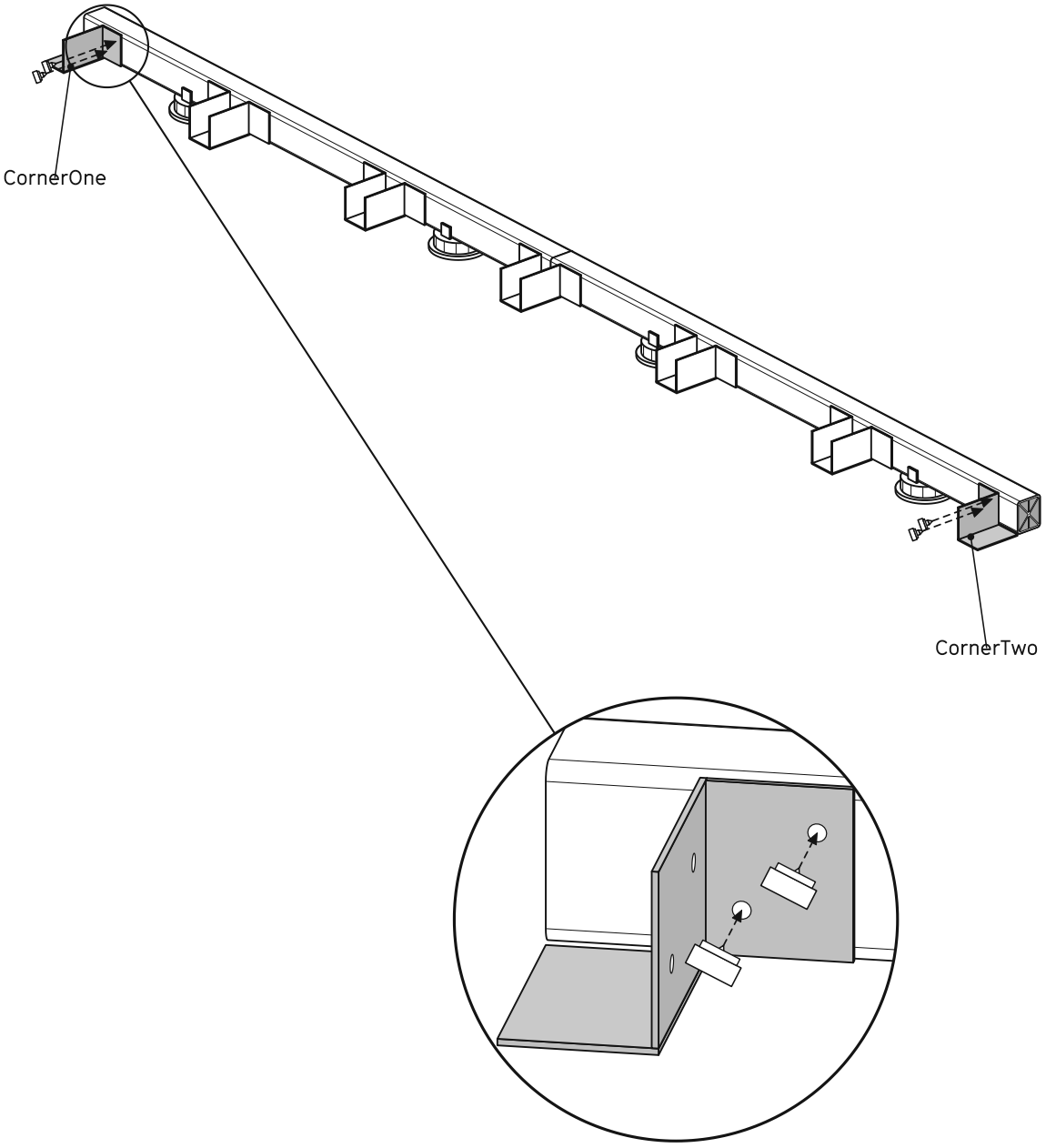

Fit CornerOne at the start of the Bearer line and CornerTwo at the end.

6 Build the Second Line

REPEAT STEPS 2 TO 5

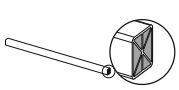

length
Bearer

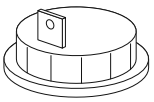

2 × length
Leg

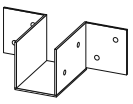

3 × length – 1
MiddleBracket

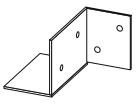

1×
CornerOne

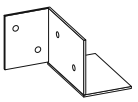

1×
CornerTwo

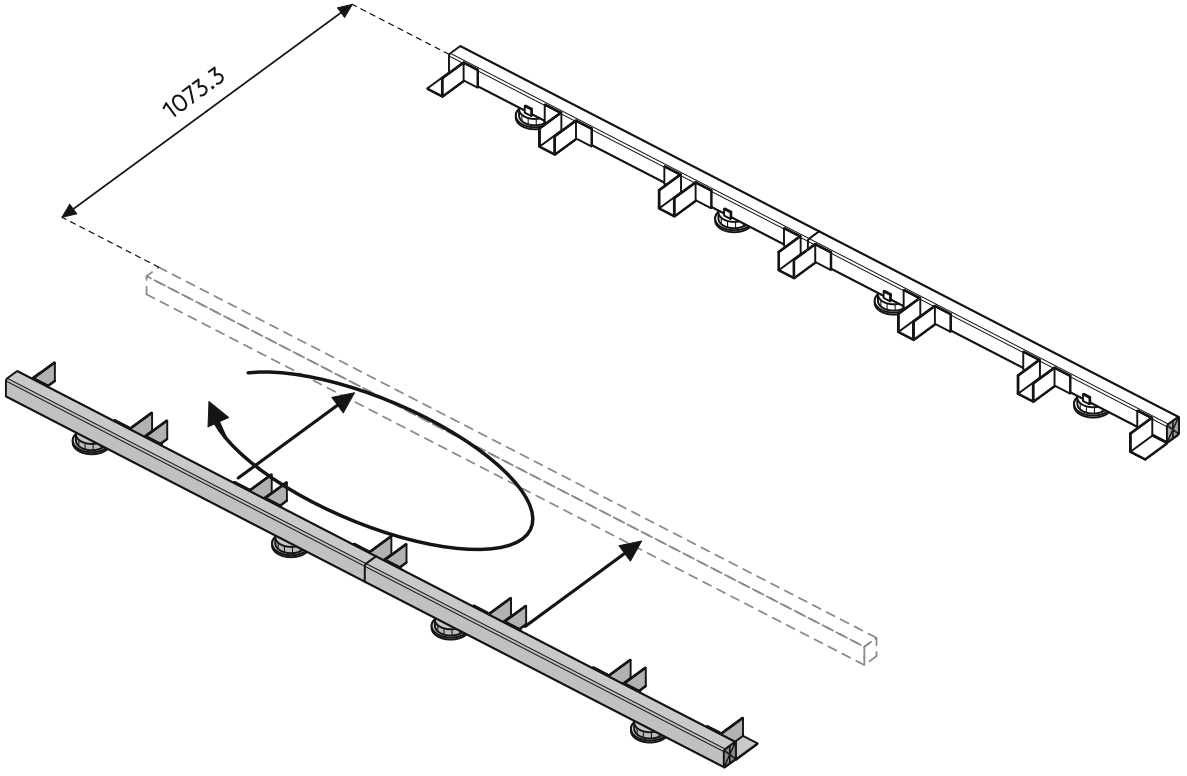

Build a second Bearer line. Turn it around so its brackets face the first line, then set the lines 1073.3 mm apart.

7 Fit the Joists

FOR EVERY FRAME

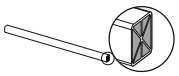

3 × length + 1

Joist



1 per hole

Bracket screw

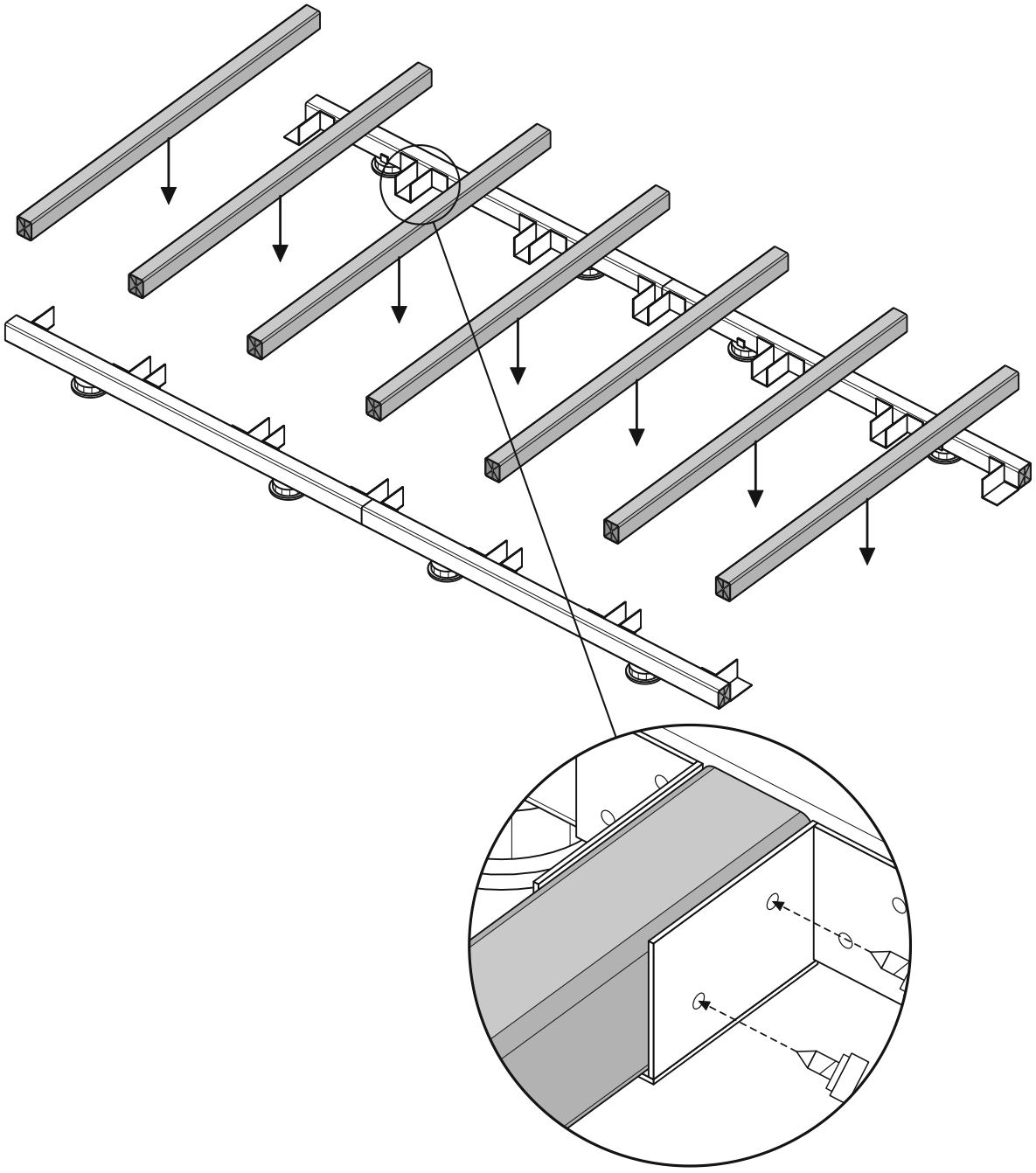

Lower a Joist into every bracket. Screw each Joist end to its bracket.

8 Square the Frame

FOR EVERY FRAME

Tape measure	Spirit level

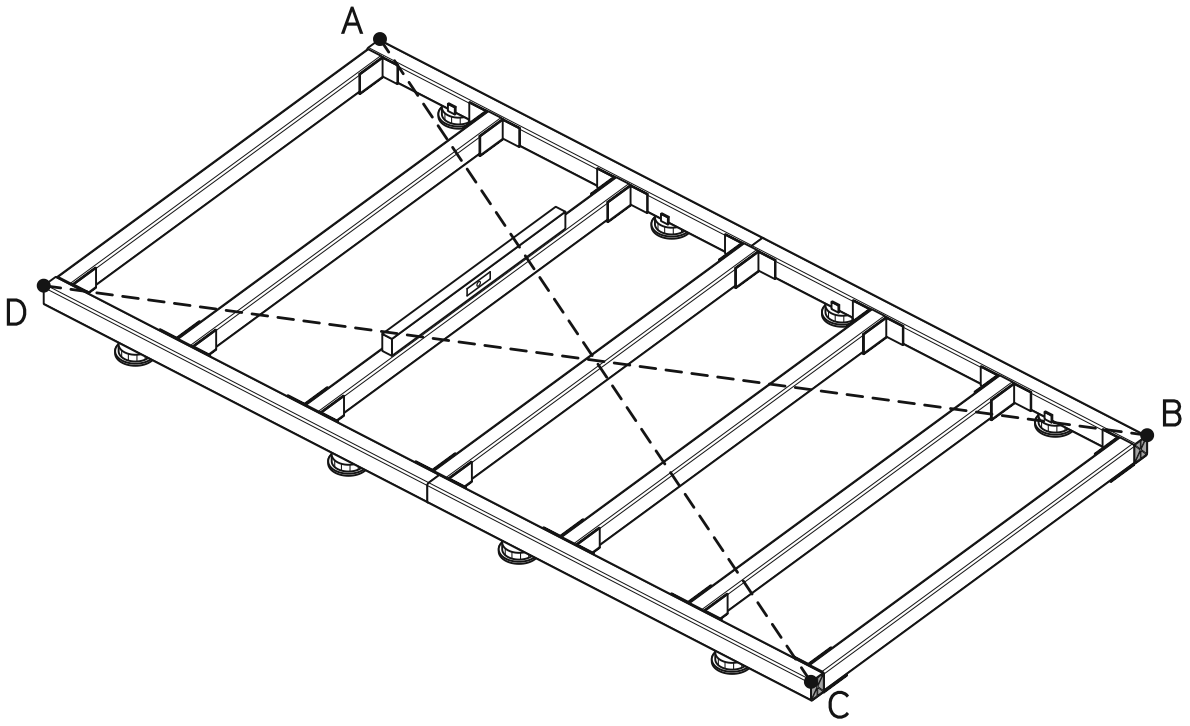

Measure both diagonals and adjust until A to C equals B to D. Check that the frame is level.

9 Join the Frames

FOR EVERY SEAM BETWEEN FRAMES

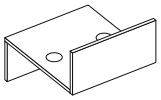

2×
BearerDoubler



4×
BearerDoubler screw

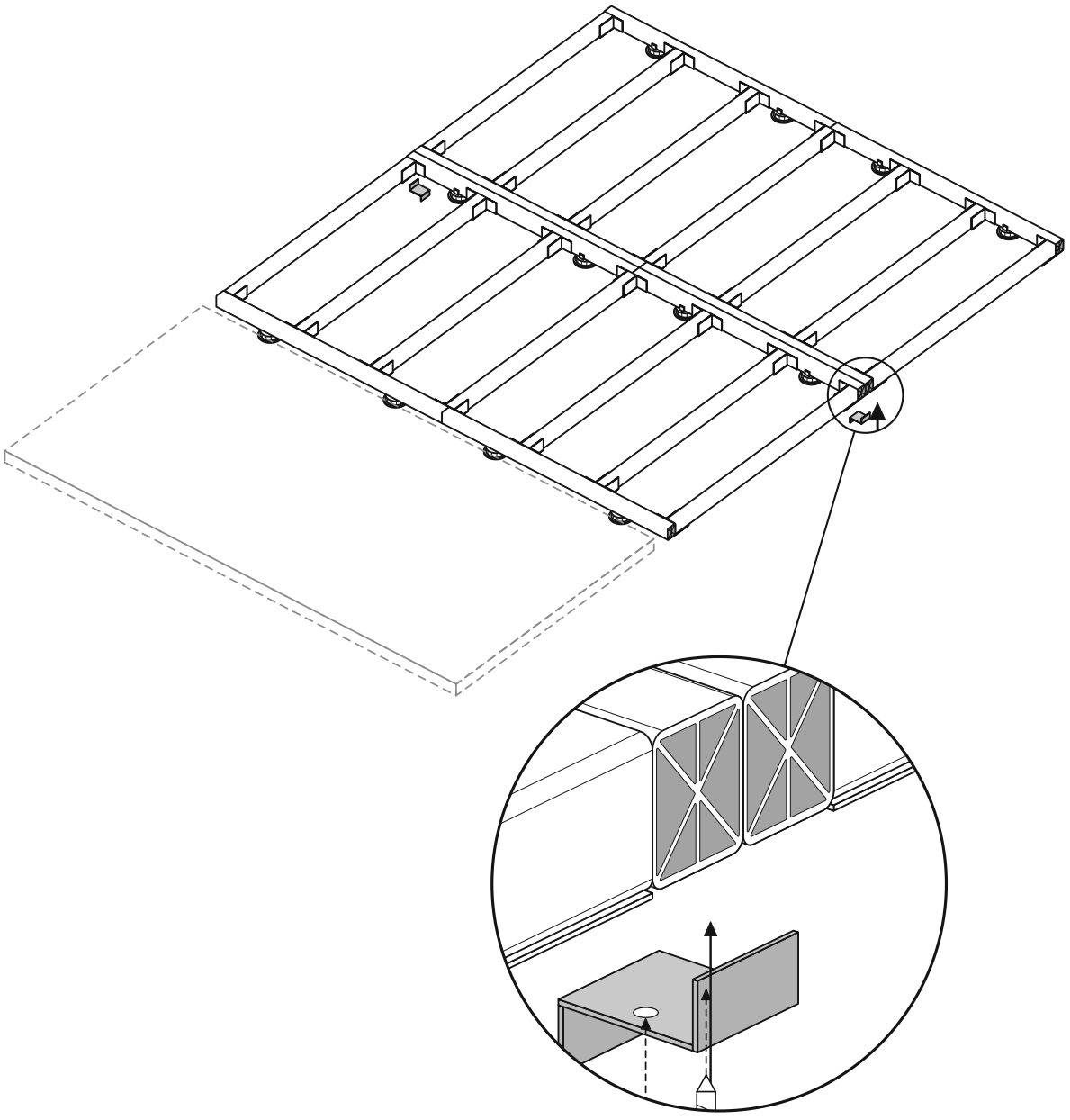

Set the next frame alongside. Fit a BearerDoubler under the paired Bearer ends at both ends of the seam.

10 Lay the First Row

ONCE, AT THE OUTER EDGE

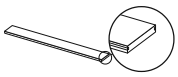

length
Board

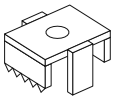

2 per Joist
Clip



1 per Clip
Clip screw

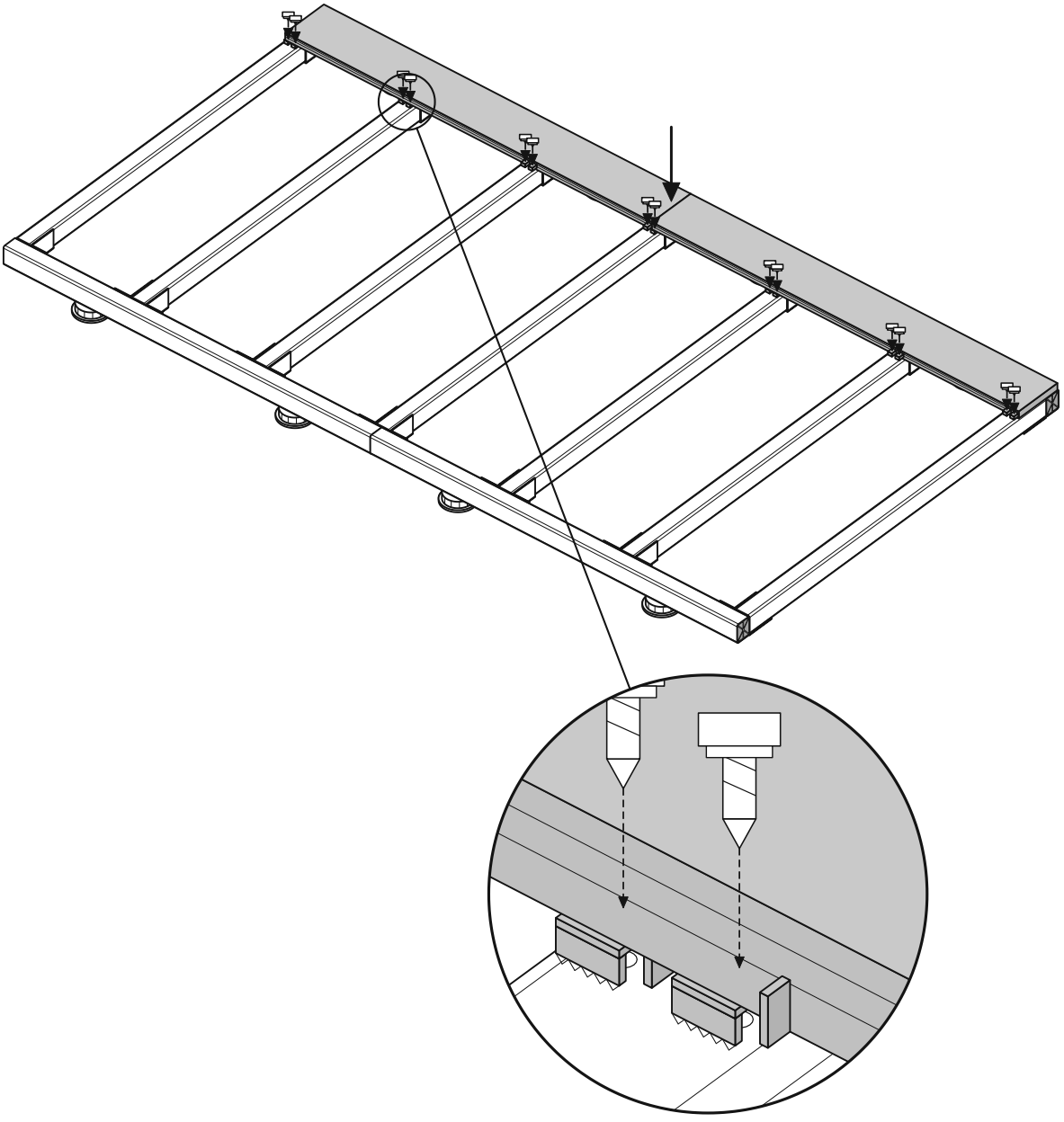

Lay the first row of Boards flush with the outer edge.
Fit 2 Clips at every Joist and screw each Clip down.

11 Lay the Remaining Rows

FOR EVERY ROW

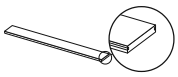	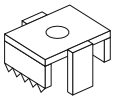	
length	2 per Joist	1 per Clip
Board	Clip	Clip screw

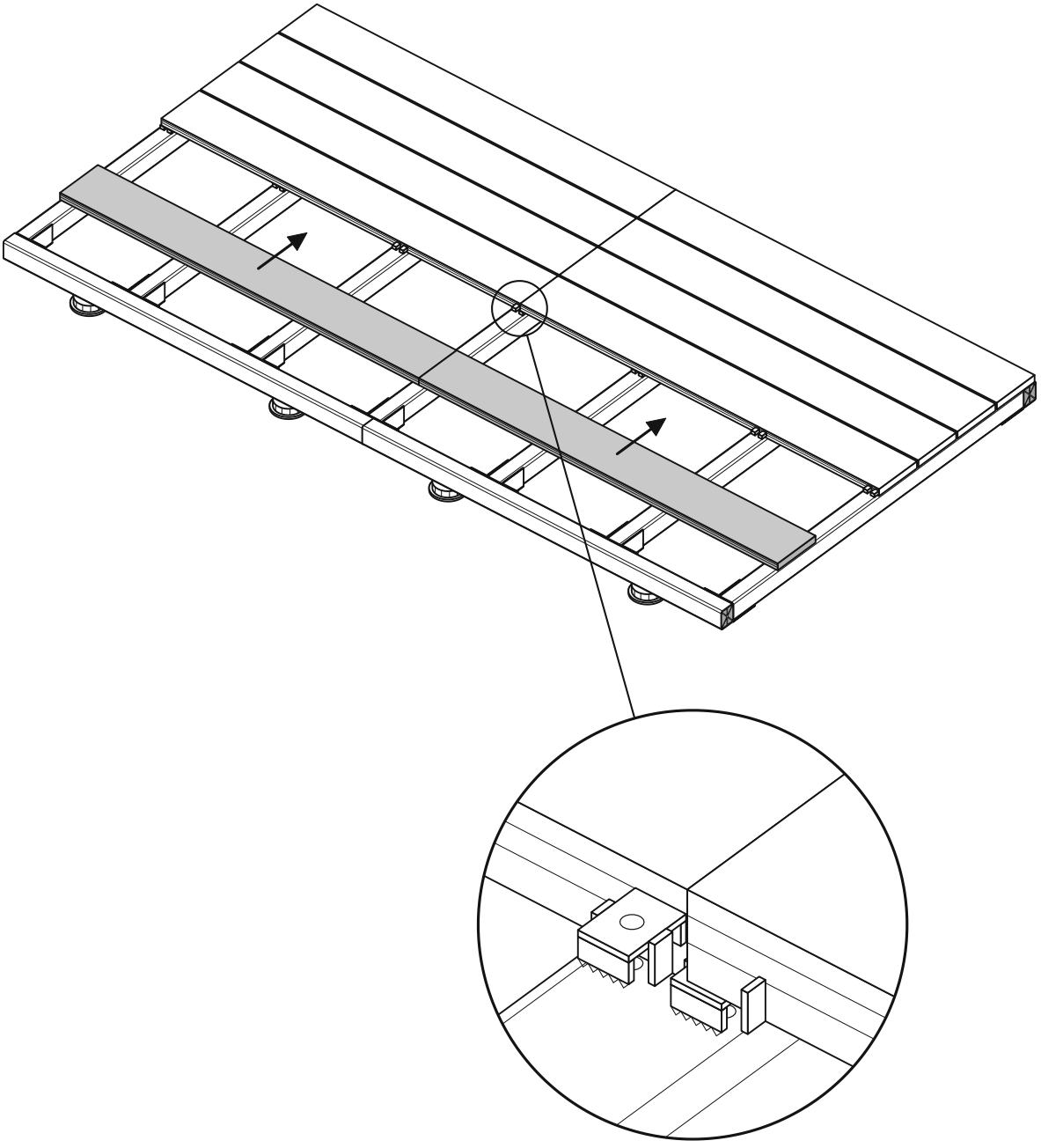

Slide the next row onto the Clips, then fit and screw down the next set of Clips. Repeat to the last row.

12 Final Check

BEFORE USE

Drill	Spirit level

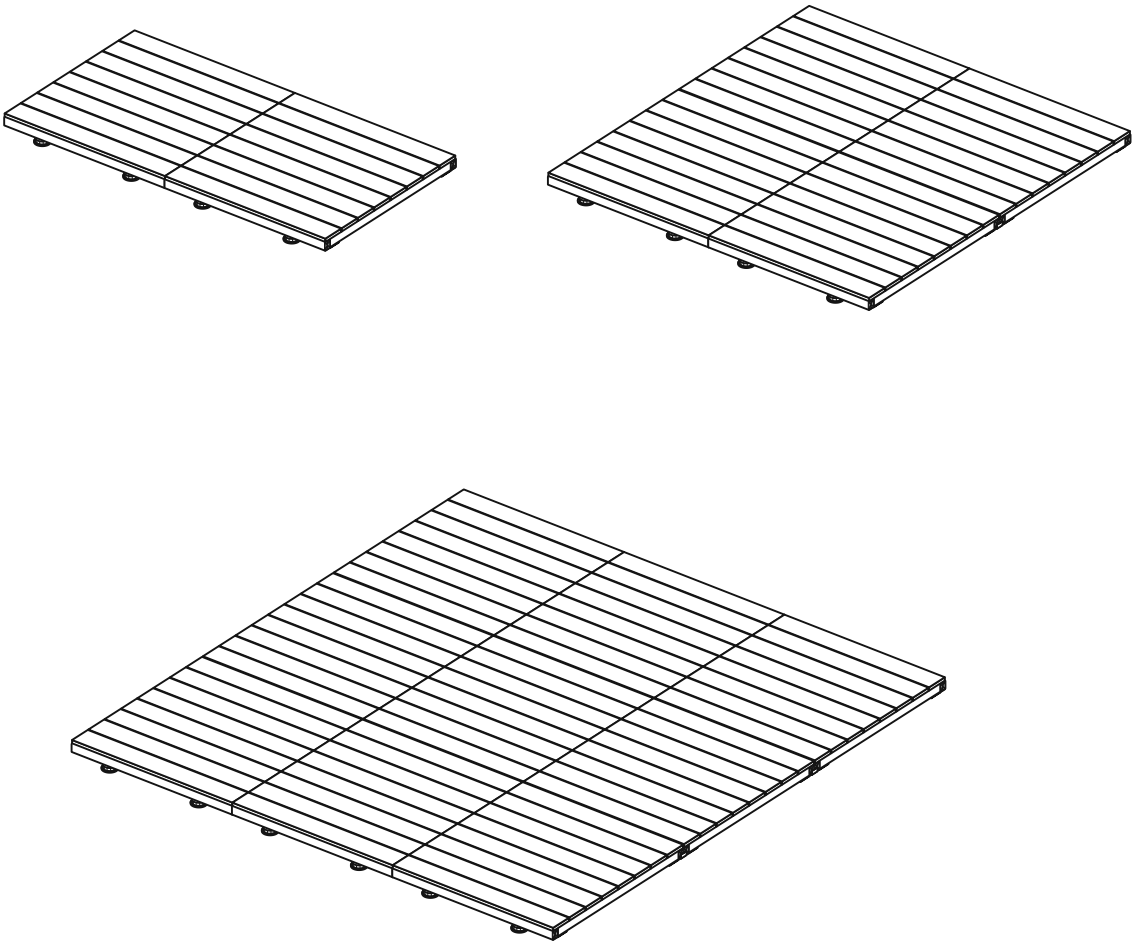

Check that every screw is tight and the deck is level. Your deck is ready to use.